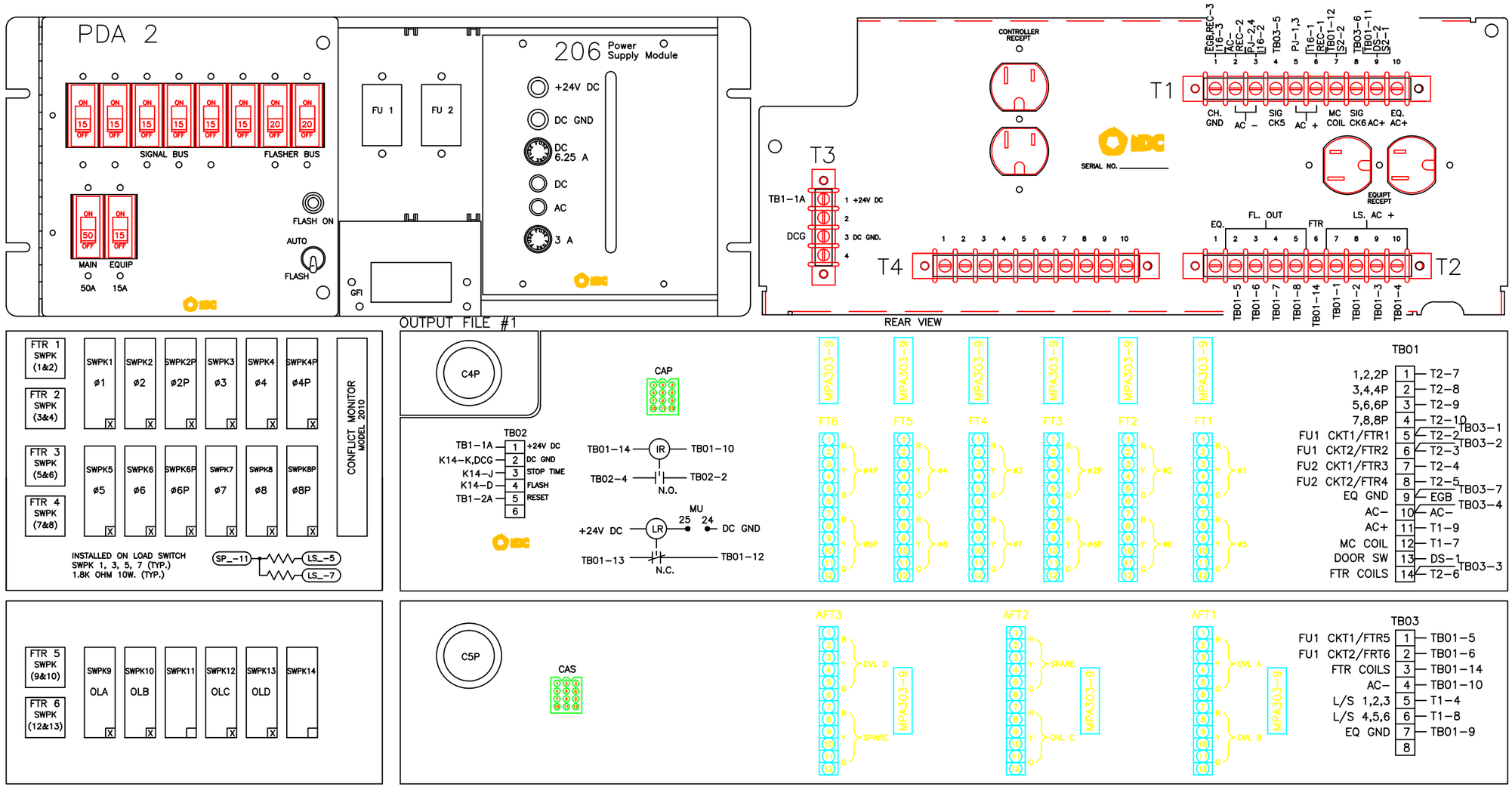

LYNNWOOD WASHINGTON
PUBLIC WORKS

CABINET

I:\Standard_Plans

DRAWING NUMBER	STD8-44B
SCALE	NONE
REVISION DATE	01/04
DEPARTMENT	PW