CABLE C1 (CALTRAN)

PIN	SOURCE	FUNCTION	CONNECT TO
1	DC GND	–	DC GND
2	01–1	4P DW	TBC–6A
3	01–2	4P W	TBD–6A
4	01–3	4 RED	TBC–5A
5	01–4	4 YEL	TBC–5B
6	01–5	4 GRN	TBD–5A
7	01–6	3 RED	TBC–4A
8	01–7	3 YEL	TBC–4B
9	01–8	3 GRN	TBD–4A
10	02–1	2P DW	TBC–3A
11	02–2	2P W	TBD–3A
12	02–3	2 RED	TBC–2A
13	02–4	2 YEL	TBC–2B
14	DC GND	INPUT DC GND	I15–4
15	02–5	2 GRN	TBD–2A
16	02–6	1 RED	TBC–1A
17	02–7	1 YEL	TBC–1B
18	02–8	1 GRN	TBD–1A
19	03–1	8P DW	TBC–12A
20	03–2	8P W	TBD–12A
21	03–3	8 RED	TBC–11A
22	03–4	8 YEL	TBC–11B
23	03–5	8 GRN	TBD–11A
24	03–6	7 RED	TBC–10A
25	03–7	7 YEL	TBC–10B
26	03–8	7 GRN	TBD–10A
27	04–1	6P DW	TBC–9A
28	04–2	6P W	TBD–9A
29	04–3	6 RED	TBC–8A
30	04–4	6 YEL	TBC–8B
31	04–5	6 GRN	TBD–8A
32	04–6	5 RED	TBC–7A
33	04–7	5 YEL	TBC–7B
34	04–8	5 GRN	TBD–7A
35	05–1	MULT,FUN,OUT 1	TBC–3B
36	05–2	MULT,FUN,OUT 2	TBC–9B
37	05–3	MULT,FUN,OUT 3	TBC–6B
38	05–4	MULT,FUN,OUT 4	TBC–12B
39	I1–1	ø2 E.CT	TBA–7B
40	I1–2	ø6 E.CT	TBA–7A
41	I1–3	ø4 E.CT	TBA–17B
42	I1–4	ø8 E.CT	TBA–17A
43	I1–5	ø2 E.CT	TBA–8B
44	I1–6	ø6 E.CT	TBA–8A
45	I1–7	ø4 E.CT	TBA–18B
46	I1–8	ø8 E.CT	TBA–18A
47	I2–1	2 CALL	TBA–6B
48	I2–2	6 CALL	TBA–6A
49	I2–3	4 CALL	TBA–16B
50	I2–4	8 CALL	TBA–16A
51	I2–5	RR1 PREEMPT	K13–F
52	I2–6	RR2 PREEMPT	K13–W
53	I2–7	ADV ENABLE	K8–W
54	I2–8	SPARE #1	K7–F
55	I3–1	ø5 E.CT	TBA–5B
56	I3–2	ø1 E.CT	TBA–5A
57	I3–3	ø7 E.CT	TBA–15B
58	I3–4	ø3 E.CT	TBA–15A
59	I3–5	ø5 E.CT	TBA–9B
60	I3–6	ø1 E.CT	TBA–9A
61	I3–7	ø7 E.CT	TBA–19B
62	I3–8	ø3 E.CT	TBA–19A
63	I4–5	ø2 E.CT	TBA–2B
64	I4–6	ø6 E.CT	TBA–2A
65	I4–7	ø4 E.CT	TBA–12B
66	I4–8	ø8 E.CT	TBA–12A
67	I5–1	2 PED	K9–F
68	I5–2	6 PED	K10–F
69	I5–3	4 PED	K9–W
70	I5–4	8 PED	K10–W
71	I5–5	EVA	K11–F
72	I5–6	EVB	K12–F
73	I5–7	EVC	K11–W
74	I5–8	EVD	K12–W
75	I6–1	SPARE #2	K7–W
76	I6–2	2 EXT	TBA–3B
77	I6–3	6 EXT	TBA–3A
78	I6–4	4 EXT	TBA–13B
79	I6–5	8 EXT,MAX INH2	TBA–13A
80	I6–6	INT ADVANCE	K8–F
81	I6–7	FLASH	K14–F
82	I6–8	STOP TIME	K14–W
83	06–1	SWPK 14–RED	TBC–18A
84	06–2	SWPK 14–GRN	TBD–18A
85	06–3	SWPK 13–RED	TBC–17A
86	06–4	SWPK 13–YEL	TBC–17B
87	06–5	SWPK 13–GRN	TBD–17A
88	06–6	SWPK 12–RED	TBC–16A
89	06–7	SWPK 12–YEL	TBC–16B
90	06–8	SWPK 12–GRN	TBD–16A
91	07–1	SWPK 11–RED	TBC–15A
92	DC GND	–	J15–4
93	07–2	SWPK 11–GRN	TBD–15A
94	07–3	SWPK 10–RED	TBC–14A
95	07–4	SWPK 10–YEL	TBC–14B
96	07–5	SWPK 10–GRN	TBD–14A
97	07–6	SWPK 9–RED	TBC–13A
98	07–7	SWPK 9–YEL	TBC–13B
99	07–8	SWPK 9–GRN	TBD–13A
100	05–5	SWPK 14–YEL	TBC–18B
101	05–6	SWPK 11–YEL	TBC–15B
102	05–7	DET. RESET	I15–3
103	05–8	WDT–MU	TBD–20A
104	DC GND	INPUT DC–GND	K15–4

CABLE C4S

PIN C4S–	CONNECT TO
1	TBC–6A
2	TBD–6A
3	TBC–5A
4	TBC–5B
5	TBD–5A
6	TBC–4A
7	TBC–4B
8	TBD–4A
9	TBC–3A
10	TBD–3A
11	TBC–2A
12	TBC–2B
13	TBD–2A
14	TBC–1A
15	TBC–1B
16	TBD–1A
17	TBC–12A
18	TBD–12A
19	TBC–11A
20	TBC–11B
21	TBD–11A
22	TBC–10A
23	TBC–10B
24	TBD–10A
25	TBC–9A
26	TBD–9A
27	TBC–8A
28	TBC–8B
29	TBD–8A
30	TBC–7A
31	TBC–7B
32	TBD–7A
33	TBC–3B
34	TBC–9B
35	TBC–6B
36	TBC–12B
37	TBD–20A

CABLE C4P

PIN C4P–	CONNECT TO
1	SWPK4P–6
2	
3	
4	
5	
6	
7	
8	
9	
10	
11	
12	
13	
14	
15	
16	
17	
18	
19	
20	
21	
22	
23	
24	
25	SWPK6P–6
26	SWPK6P–10
27	SWPK6–6
28	SWPK6–8
29	SWPK6–10
30	6
31	
32	
33	SWPK2P–8
34	SWPK6P–8
35	SWPK4P–8
36	SWPK8P–8
37	CM–22

CABLE C5S

PIN C5S–	CONNECT TO
1	TBC–18A
2	TBD–18A
3	TBC–17A
4	TBC–17B
5	TBD–17A
6	TBC–16A
7	TBC–16B
8	TBD–16A
9	TBC–15A
10	TBD–15A
11	TBC–14A
12	TBC–14B
13	TBD–14A
14	TBC–13A
15	TBC–13B
16	TBD–13A
17	TBC–18B
18	TBC–15B
19	
20	
21	
22	
23	
24	TB1–1A

CABLE C5P (AUX FILE)

PIN C5P–	CONNECT TO
1	SWPK14–6
2	SWPK14–10
3	SWPK13–6
4	SWPK13–8
5	SWPK13–10
6	SWPK12–6
7	SWPK12–8
8	SWPK12–10
9	SWPK11–6
10	SWPK11–10
11	SWPK10–6
12	SWPK10–8
13	SWPK10–10
14	SWPK9–6
15	SWPK9–8
16	SWPK9–10
17	SWPK14–8
18	SWPK11–8
19	
20	
21	
22	
23	
24	SWPK9–9

CABLE C11P

PIN	SOURCE	FUNCTION	CONNECT TO
1	08–1	OUTPUT #56	T
2	08–2	OUTPUT #57	T
3	08–3	OUTPUT #58	T
4	08–4	OUTPUT #59	T
5	08–5	OUTPUT #60	T
6	08–6	OUTPUT #61	T
7	08–7	OUTPUT #62	T
8	08–8	OUTPUT #63	T
9	DC GND	DC GND	DCG
10	I4–1	SD #1	TBA–1A
11	I4–2	SD #2	TBA–4A
12	I4–3	SD #3	TBA–11A
13	I4–4	SD #4	TBA–14A
14	DC GND	DC GND	DCG
15	I7–1	SD #5	TBA–1B
16	I7–2	SD #6	TBA–4B
17	I7–3	SD #7	TBA–11B
18	I7–4	SD #8	TBA–14B
19	I7–5	SD #9	TBB–1A
20	I7–6	SD #10	TBB–2A
21	I7–7	SD #11	TBB–3A
22	I7–8	SD #12	TBB–4A
23	I8–1	SD #13	TBB–5A
24	I8–2	SD #14	TBB–6A
25	I8–3	SD #15	TBB–7A
26	I8–4	SD #16	TBB–8A
27	I8–5	SD #17	TBB–9A
28	I8–6	SD #18	TBB–10A
29	I8–7	SD #19	TBB–11A
30	I8–8	SD #20	TBB–12A
31	DC GND	DC GND	DCG
32			
33			
34			
35			
36			
37	DC GND	DC GND	DCG

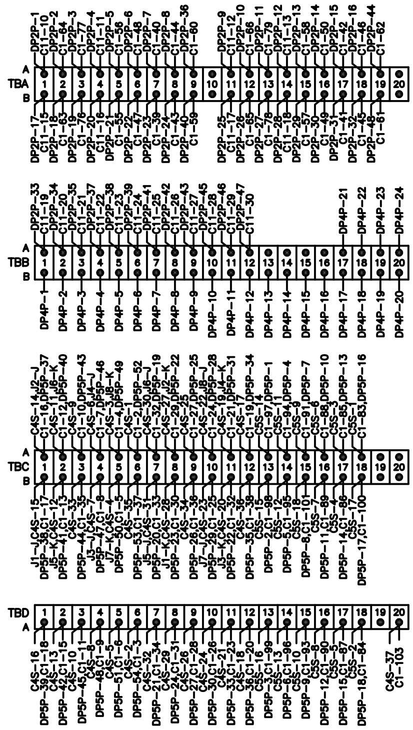

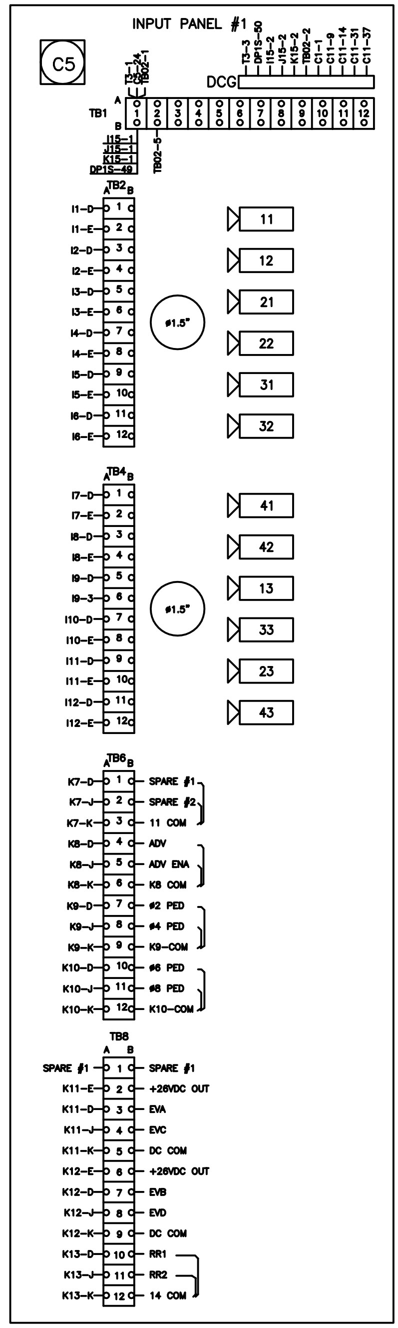

(AS VIEWED FROM FRONT)

PIN	FUNCTION	PIN	FUNCTION
1	CH2G (ø2)	A	CH2Y (ø2)
2	CH13G (2P)	B	CH6G (ø6)
3	CH6Y (ø6)	C	CH15G (6P)
4	CH4G (ø4)	D	CH4Y (ø4)
5	CH14G (4P)	E	CH8G (ø8)
6	CH8Y (ø8)	F	CH16G (8P)
7	CH5G (ø5)	H	CH5Y (ø5)
8	CH13Y (2P)	J	CH1G (ø1)
9	CH1Y (ø1)	K	CH15Y (6P)
10	CH7G (ø7)	L	CH7Y (ø)
11	CH14Y (4P)	M	CH3G (ø3)
12	CH3Y (ø3)	N	CH16Y (8P)
13	CH9G (OLA)	P	N/A
14	N/A	R	CH10G (OLB)
15	CH11Y (OLC)	S	CH11G (OLC)
16	CH9Y (OLA)	T	N/A
17	N/A	U	CH10Y (OLB)
18	CH12Y (OLD)	V	CH12G (OLD)
19	N/A	W	N/A
20	CH GND	X	N/A
21	AC–	Y	DC GND
22	WATCHDOG	Z	EXT RESET
23	+24V	AA	TIED TO 23 INTERNAL TO CM
24	CM25	BB	STOP TIME (OUTPUT)
25	CM24	CC	N/A
26	N/A	DD	N/A
27	N/A	EE	OUTPUT SWITCH SIDE 2
28	OUTPUT SWITCH SIDE 1	FF	AC+

TB01

TERMINAL	FUNCTION	CONNECT TO
1	POWER CKT #1	LS1,2,3–1
2	POWER CKT #2	LS4,5,6–1
3	POWER CKT #3	LS7,8,9–1
4	POWER CKT #4	LS10,11,12–1
5	FL UNIT #1 CKT #1	K1–7,8
6	FL UNIT #1 CKT #2	K2–7,8
7	FL UNIT #2 CKT #1	K3–7,8
8	FL UNIT #2 CKT #2	K4–7,8
9	EQUIPMENT GROUND	LB–CG, CM–20
10	AC–	IR
11	AC+	T1–9
12	MC2 COIL	LR, CM–EE
13	DOOR SWITCH	LR
14	FT RELAY COIL	IR, K4–1

TB02

TERMINAL	FUNCTION	CONNECT TO
1	+24V	TB1–1A, LR, CM–23
2	DC GND	IR, CM–Y–25
3	STOP TIME	CM–BB
4	FLASH SENSE	IR
5	EXT. RESET	CM–Z
6	MON IN	N/U

TA FIELD TERMINALS

TERMINAL	FUNCTION	MOTHER BOARD TERMINATION
1	FLASH POWER 1	K5–A
2	FLASH POWER 2	K6–A
3	FLASH CONTROL	FLC
4	AC RETURN	AC–
5	AC+ LIGHTS 1	AC+ 1,2,3
6	AC+ LIGHTS 2	AC+ 4,5,6
7	CHS GND	CGB

2010 MONITOR
CHANNEL ASSIGNMENTS

PIN		CONNECT TO
J	1 GRN	SWPK 1 GRN
9	1 YEL	SWPK 1 YEL
I	2 GRN	SWPK 2 GRN
A	2 YEL	SWPK 2 YEL
M	3 GRN	SWPK 3 GRN
12	3 YEL	SWPK 3 YEL
4	4 GRN	SWPK 4 GRN
D	4 YEL	SWPK 4 YEL
7	5 GRN	SWPK 5 GRN
H	5 YEL	SWPK 5 YEL
B	6 GRN	SWPK 6 GRN
3	6 YEL	SWPK 6 YEL
10	7 GRN	SWPK 7 GRN
L	7 YEL	SWPK 7 YEL
E	8 GRN	SWPK 8 GRN
6	8 YEL	SWPK 8 YEL
13	9 GRN	SWPK 9 GRN
16	9 YEL	SWPK 9 YEL
R	10 GRN	SWPK 10 GRN
U	10 YEL	SWPK 10 YEL
S	11 GRN	SWPK 12 GRN
15	11 YEL	SWPK 12 YEL
V	12 GRN	SWPK 13 GRN
18	12 YEL	SWPK 13 YEL
2	13 GRN	SWPK 2P GRN
8	13 YEL	N/U
5	14 GRN	SWPK 4P GRN
11	14 YEL	N/U
C	15 GRN	SWPK 6P GRN
K	15 YEL	N/U
F	16 GRN	SWPK 8P GRN
N	16 YEL	N/U

CABLE CAP
(LOCATED IN OUTPUT FILE)

PIN CAP–	CONNECT TO
1	P1–9
2	CM–16
3	CM–13
4	P1–10
5	CM–U
6	CM–R
7	P1–11
8	CM–15
9	CM–S
10	P1–12
11	CM–18
12	CM–V

CABLE CAS
(LOCATED IN AUX FILE)

PIN CAS–	CONNECT TO
1	AFT1–2
2	AFT1–4
3	AFT1–6
4	AFT1–8
5	AFT1–10
6	AFT1–12
7	AFT2–8
8	AFT2–10
9	AFT2–12
10	AFT3–2
11	AFT3–4
12	AFT3–6

CM
(AS VIEWED FROM REAR)

CONNECT	PIN	PIN	CONNECT
FT2–4	A	1	FT2–6
FT2–12	B	2	FT3–6
FT3–12	C	3	FT2–10
FT5–4	D	4	FT5–6
FT5–12	E	5	FT6–6
FT6–12	F	6	FT5–10
FT1–10	H	7	FT1–12
FT1–6	J	8	CH13Y (CAP)
CH15Y (CAP)	K	9	FT1–4
FT4–10	L	10	FT4–12
FT4–6	M	11	CH14Y (CAP)
CH16Y (CAP)	N	12	FT4–4
CAP	P	13	CAP–3
CAP–6	R	14	CAP
CAP–9	S	15	CAP–8
CAP	T	16	CAP–2
CAP–5	U	17	CAP
CAP–12	V	18	CAP–11
CAP	W	19	CAP
CAP	X	20	TB01–9
TB02–2	Y	21	TB01–10
TB02–5	Z	22	C4–37
CAP	AA	23	TB02–1
TB02–3	BB	24	LR–A
CAP	CC	25	TB02–2
CAP	DD	26	CAP
TB01–12	EE	27	CAP
CM–28 TB01–11	FF	28	CM–FF

CITY OF Lynnwood

10-2001 8-44
date number